AMARI Callbox mini User guide

Version: 2019-07-30

Table of Contents

1 Introduction

AMARI Callbox Mini is a 3GPP compliant eNodeB and EPC allowing functional and performance testing of LTE, LTE-M and NB-IoT devices. It also includes an integrated IMS server as well as an eMBMS gateway for VoLTE and eMBMs testing.

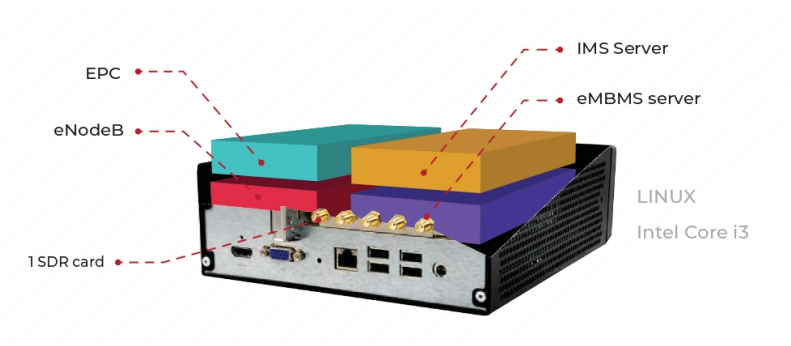

The callbox mini is a turnkey solution running on Fedora 28 operating system. It embeds one SDR card and all software components and licenses required to emulate your LTE network.

This document describes the first steps to start and configure your Amarisoft LTE Callbox. For advanced configurations and testing, please refer to the application notes and other documents available under extranet.amarisoft.com or under the /root/<components>/doc/ folders of your callbox.

2 Hardware setup

2.1 Power supply

Plug the external power adapter provided with the callbox in the `DC-in` Connector located in the right corner of the rear panel and press the `Power on` button on the front panel to turn it on.

Power adapter specifications:
Input: 100~240 V AC, 50~60 Hz, max. 2.5A
Output: Output: 19.5 V DC, max. 9.23 A, max. 180 W output wattage

2.2 Sim card

The callbox is delivered with a test sim card that is already provisioned in the EPC database. No additional configuration is required for authenticating devices using this SIM card.

SIM card specifications:

- IMSI: 001010123456789
- K: 00112233445566778899aabbccddeeff
- sim_algo: XOR
- Non programmable USIM card
- Support both 1.8V and 3V voltage.

It is possible to use and provision different SIM cards for your testing. In that case please See [Provisioning of new SIM cards], page 9, for more details

2.3 Wireless RF connection

When running test over the air, connect the four LTE antennas provided with the callbox to the SMA connectors (TX1, RX1, TX2, RX2) located on the rear panel of the callbox.

2.4 Wired RF connection

When running test in conducted mode, first thing to do is to connect the callbox correctly to the device as described in the following sections.
Each SDR card has two RX and two TX SMA connectors plus one GPS connector.

- `Rx1` is the main receive antenna port.
- `Rx2` is the diversity receive antenna port.

- `Tx1` is the main transmit antenna port.
- `Tx2` is the diversity transmit antenna port.
- `GPS` is used for connecting an external GPS clock. See trx_sdr.pdf document for more details.

2.4.1 RF connection for one cell 2x2 MIMO in FDD mode

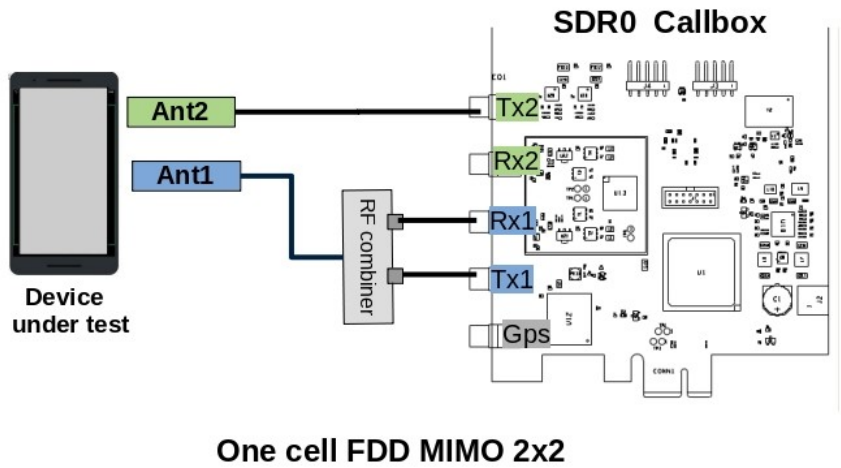

Note: For SISO test, connection between DUT antenna2 and Callbox Tx2 is not required

2.4.2 RF connection for one cell 2x2 MIMO in TDD mode

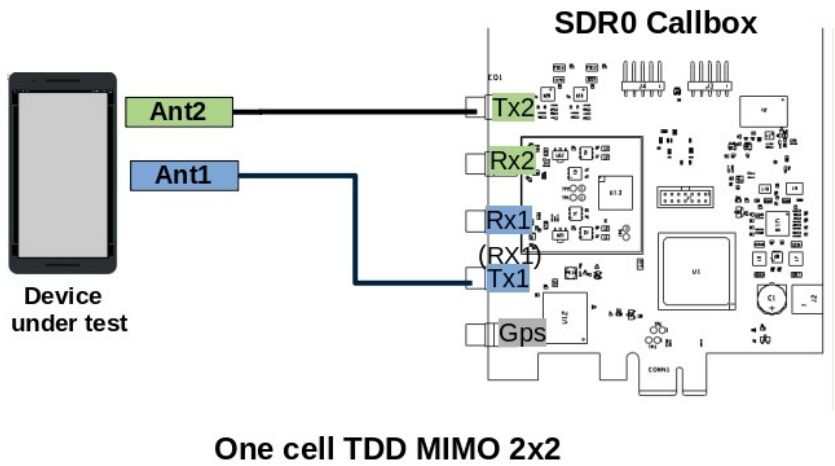

Note: in TDD mode, as both TX and RX are sent on the same channel, only TX1 and TX2 ports are needed.
However, with Amarisoft SDR card, it's possible to force the DL signal reception on RX port and Uplink signal transmission on TX port when `rx_antenna: "rx"` is set in the RF driver configuration file.

This improves the performance of the SDR card as we don't have to switch the RF several times per radio frame.

When `rx_antenna: "rx"` is set, RF connection is the same as for FDD.

2.4.3 RF Antenna gain

In conducted mode, TX and RX gains must be adjusted according to your setup. See [TX/RX gain setting], page 8, for more details.

3 Connection to AMARI callbox

3.1 Locally

You can connect locally to your callbox by connecting a monitor and a keyboard to the PC. To login as root, please use `root` / `toor` as login / password.

There is also a user account with user/resu as login/password.

Note: The Amarisoft software suit is installed and executed under root account.

3.2 Remotely

The Ethernet interface of the callbox is configured with DHCP. If you know the IP address allocated to your callbox, you can directly make a `SSH` connection in Linux by typing

```
ssh root@<IP address>
```

or by using `PuTTY` on Windows.

If you don't know the IP address of the callbox, then you need to access the PC locally first (see above) and type the following command to retrieve the IP address of the PC.

```
ifconfig
```

4 LTE service

Callbox is configured to provide an automatic LTE service. At each reboot of the PC, LTE network is turned on automatically.
The default config is : one cell, LTE band 7, 20 MHz bandwidth and MIMO 2x2.

4.1 Manage LTE automatic service

4.1.1 Status

You can check the LTE service status this way:

```
service lte status
```

The command will return `"active (running)"` status if service is running

4.1.2 Stop

You can stop all LTE components this way:

```
service lte stop
```

4.1.3 Start

You can start them again this way:

```
service lte start
```

4.1.4 Disable

You may also prevent them to start at boot time:

```
systemctl disable lte
```

NB: lte service remains enable until next reboot
NB2: this command is not available on Ubuntu version <= 14

4.1.5 Enable

You may enable service at boot time this way:

```
systemctl enable lte
```

NB: lte service remains disable until next reboot
NB2: this command is not available on Ubuntu version <= 14

5 eNodeB configuration

5.1 Selection of eNodeB configuration file

The default file used by the lte automatic service for configuring the eNodeB component is `enb.cfg` (available under /root/enb/config directory).
This file aims to set eNodeB parameters such as frequency, cell bandwidth, number of layer and others.

Please note that this file is a symbolic link to real configuration file as depicted below

```
-rw-rw-r-- 1 user user  6643 Jul  4 16:24 enb-ca.cfg
-rw-rw-r-- 1 user user  6675 Jul  4 16:24 enb-catm1.cfg
lrwxrwxrwx 1 root root    17 Jul  4 16:37 enb.cfg -> mimo-2x2-5mhz.cfg
-rw-rw-r-- 1 user user  5500 Jul  4 16:24 enb.default.cfg
```

Some examples of configuration file (for nb-iot, cat-M1 or Carrier aggregation as instance) are provided in Amarisoft releases as a starting point.
To change the eNodeb configuration and select one of these files, update the enb.cfg symbolic link using the `"ln -sfn <config file> enb.cfg"` command

Default configuration eNodeb is one LTE Cell, 20MHz cell bandwidth, MIMO mode

5.2 Customization of eNodeB parameters

Once eNodeB configuration file has been selected (as a starting point), you can now edit it and customize key parameters such as:

- Frequency : dl_earfcn
- Cell bandwidth : n_rb_dl
- Number of layer : n_antenna_dl
- Others..

All parameters available are described in the lteenb.pdf document.

You will also find a generic enb.default.cfg file that can be easily tuned using the #defines in the header

```
#define TDD                 0 // Values: 0 (FDD), 1(TDD)
#define N_RB_DL             25 // Values: 6 (1.4 MHz), 15 (3MHz), 25 (5MHz), 50 (10MHz), 75
#define N_ANTENNA_DL        1 // Values: 1 (SISO), 2 (MIMO 2x2)
#define N_ANTENNA_UL        1 // Values: 1, 2
#define CHANNEL_SIM         0 // Values: 0 (channel simulator disabled), 1 (channel simulato
```

For example, to configure a 20mhz MIMO TDD cell, just set the #defines this way:

```
#define TDD                 1
#define N_RB_DL             100
#define N_ANTENNA_DL        2
#define N_ANTENNA_UL        1
#define CHANNEL_SIM         0
```

5.3 TX/RX gain setting

TX and RX antenna gain values must be customized in order to avoid saturation when set too high or Bler when set too low. Those two values actually depend on your setup:

- Conducted vs wireless conditions
- Physical RF attenuator used
- Combiner/divider used

TX and RX gain values are defined in RF configuration file located under /root/enb/config/rf_driver directory.
To know which files is used by LTE service, just look at enb.cfg file.
Example:

```
include "rf_driver/1chan.cfg",
```

5.3.1 Wired test

When the device under test is connected through RF cable to the eNodeb, the recommended RX and TX antenna gain values are :

```
tx_gain: 60.0, /* TX gain (in dB) */
rx_gain: 0.0, /* RX gain (in dB) */
```

If physical RF attenuators (or RF combiners) are used, additional gain must be added to these default values equivalent to the path loss introduced

> Note: max SDR input is -10 dBm, max SDR output is 5dBm (depending on the frequency).

5.3.2 Wireless test

In Wireless test conditions (i.e when LTE antenna are used), the recommended RX and TX antenna gain values are :

```
tx_gain: 90.0, /* TX gain (in dB) */
rx_gain: 60.0, /* RX gain (in dB) */
```

6 Core network configuration

LTEMME is a LTE MME (Mobility Management Entity) implementation. It has a built-in SGW (Serving Gateway), PGW (Packet Data Network Gateway), PCRF (Policy and Charging Rule Function), HSS (Home Subscriber Server) and EIR (Equipment Identity Register). It is used with the Amarisoft LTE eNodeB to build a highly configurable LTE test network.

6.1 Selection of MME configuration file

The default file used by the lte automatic service for configuring the Core network is `mme.cfg` (available under /root/mme/config directory).
This file aims to set parameters such as PLMN ID, network name, PDN list, APN name and others.

Please note that this file is a symbolic link to real configuration file as depicted below

```
-rw-r--r-- 1   33 tape 1655 Apr  2 17:36 ims.cfg
-rw-r--r-- 1 root root    4 Jun 24 22:46 lte_ue_ims.db
lrwxrwxrwx 1 root root   11 Jan 21 18:57 mme.cfg -> mme-ims.cfg
-rw-r--r-- 1   33 tape 4455 Oct 18  2018 mme-default.cfg
-rwxr-xr-x 1   33 tape 1155 Oct 18  2018 mme-ifup
-rw-r--r-- 1   33 tape 5707 Apr  2 17:25 mme-ims.cfg
-rw-r--r-- 1 root root 5698 Apr  2 17:25 mme-ims-old.cfg
-rw-r--r-- 1   33 tape  371 Oct 18  2018 mt_call_qos.sdp
-rw-r--r-- 1   33 tape  255 Oct 18  2018 mt_call.sdp
-rw-r--r-- 1   33 tape 1125 Oct 18  2018 mt_call_video.sdp
-rw-r--r-- 1   33 tape 3324 Apr  2 17:25 ue_db-ims.cfg
```

6.2 Customization of MME parameters

6.2.1 PLMN ID

Default PLMN ID of callbox is 001 01.

If the test sim card provided with the AMARI callbox is used, you can skip this section. No customization is required

If your test SIM card has a different HPLMN, you can change the PLMN of the box.

in `/root/mme/config/mme.cfg` file, change `plmn: "00101"` value and replace 00101 by your MCC/MNC code .

> Note : Same modification must be done at eNodeB side:
> In `/root/enb/config/enb.cfg` file, modify or add a new MCC/MNC value in the `plmn_list` array.

6.2.2 Adding new SIM card to the database

If the test sim card provided with the AMARI callbox is used, you can skip this section. No customization is required.
Same if you want to connect multiple UE using the same sim card model (and same IMSI by consequence). The MME will allow each UE to attach with the same IMSI (001010123456789).UE are distinguished with their IMEI in that case.

Otherwise, if other test SIM cards with different IMSI or secret key values are used, they must be declared in the EPC database (HSS)

For that, open the `/root/mme/config/ue_db-ims.cfg` and add an entry for each sim card in the `ue_db` array . Example :

```
{
    sim algo: "milenage",
    imsi: "001010000000001",
    opc: "000102030405060708090A0B0C0D0E0F",
    amf: 0x9001,
    sqn: "000000000000",
    K: "00112233445566778899AABBCCDDEEFF",
},
```

Note: Secret key parameters are mandatory as both UE and Network need to authenticate each other .

6.2.3 Commercial SIM card

Any SIM card can be used with the AMARI callbox as long as it's been declared in the UE database as described in the section above.

However, it is very unlikely that you get the secret key parameters from the network operator required for the authentication and the security mechanism.
In that case, the solution consists in disabling the authentication using one of the two methods described below :

1) If the UE accepts the use of EIA0 (Null Integrity algorithm) in the NAS/RRC security mode control procedures outside of an emergency call, then set the following option in your MME configuration file:

```
authentication_mode: skip,
```

2) If you know the command at UE side to skip both the authentication and security mode control procedures, then set the following options in your MME configuration file:

```
authentication_mode: skip,
skip_smc_proc: true,
```

and set the following option in your eNB configuration file (eNB configuration object, not the cell configuration object)

```
skip_smc_proc: true,
```

6.2.4 APN configuration

MME is configured by default with four APN :

1. Default
2. Internet
3. IMS
4. SOS

For connecting your device to the callbox, one of these APN must be configured at UE side. See [UE configuration], page 12, for more details.
Otherwise, if for any reason, the device under test must use a specific APN, the modification can be done at MME side:

1. Open /root/mme/config/mme.cfg file.

2. Replace the preconfigured "internet" APN name as instance with the expected APN name or create a new entry in the pdn_list array.
3. Restart the system with "service lte restart" command

6.3 VoLTE call

AMARI Callbox embeds an IMS server that can be used for running basic IMS tests such as VoLTE, ViLTE or SMS over IMS. For more information about the IMS functionality, please refer to appnote_ims.pdf document .
Also, See [VoLTE setting], page 12, for more details about UE configuration.

7 UE configuration

7.1 Internet setting

For connecting your device to internet, APN setting must be configured at UE side to match callbox setting.

As described in previous section, the callbox is preconfigured with four APN :

- "Default": This APN name is frequently used by the UE when no specific APN is set. However, some UEs doesn't expose an internet connection when this generic APN is used. In that case, we recommend to create a "internet" apn as described below.
- "Internet": Second APN name preconfigured in order to route internet IP traffic.
- "IMS": APN for VoLTE call
- "SOS": APN for emergency services

AT UE side, go in setting menu to add a new APN:
Example on Samsung S5 device:

- Go to `Settings/More networks/Mobile networks`
- Turn on Data roaming
- Go back to Mobile network.
- Add the first APN with the following parameters:
  - Name = Internet
  - APN = internet
  - APN type = internet,default
- Save it and select it.

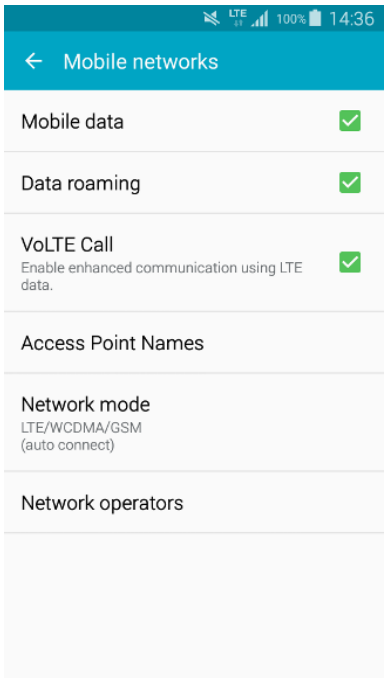

7.2 VoLTE setting

If handset supports VoLTE, you just need to check `VoLTE Call` is ticked on your handset menu as depicted in the picture below.

However, most of the commercial devices are locked and behave differently. Some devices have a white list of authorized PLMN, some require that "UE operation mode" byte is set to "type approval operations" in USIM Elementary File Administrative Data(EFad). To overcome this issue, a reference UE can be provided by Amarisoft . Please contact support team for more details.

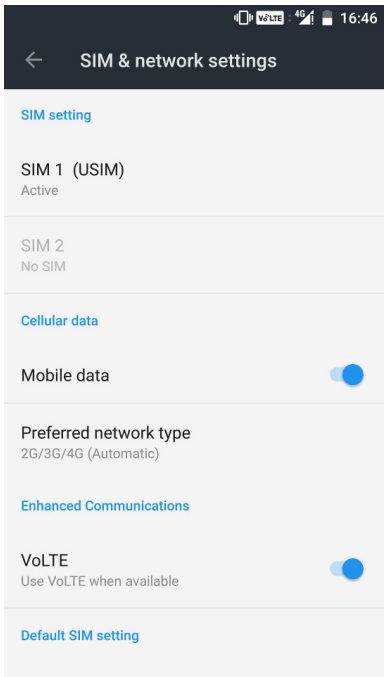

8 Monitoring

Once all eNodeb and MME parameters have been configured, you can restart the lte service with `service lte restart` command to reload the configuration files and connect your device(s).

To monitor your eNodeB/EPC or troubleshoot any issues, several tools and logs are available as described in the following sections.

8.1 Access to software monitors

Once you are logged on your callbox, you can access software components (eNB, MME, IMS or MBMSGW) using screen command:

```
screen -x lte
```

This will connect you to different component monitor.

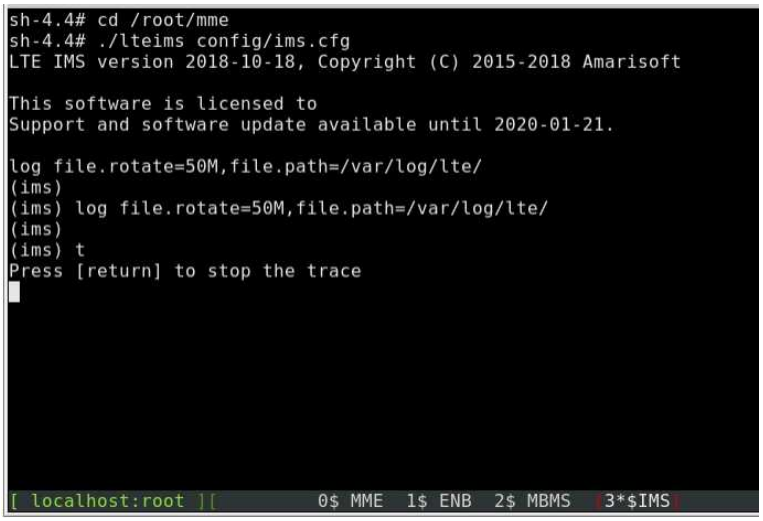

Next sections show you basic methods. For more information please refer to `screen` documentation (`https://www.gnu.org/software/screen/manual/screen.html`).

8.1.1 Select component

Each component monitor is inside a window. You can switch from a window to another with the command:

```
ctrl+a <window index>
```

Where window index is:

- 0 MME
- 1 eNB
- 2 MBMSGW
- 3 IMS

> Note: press simultaneously `CTRL` key and `a` key, release them, then press number key.

You can also switch to next window:

```
ctrl+a <space>
```

Each component screen offers a list of commands that can be used either to get status or trigger action. Each of them are documented in the component documentations (example lteenb.pdf) or inline with the "help" command

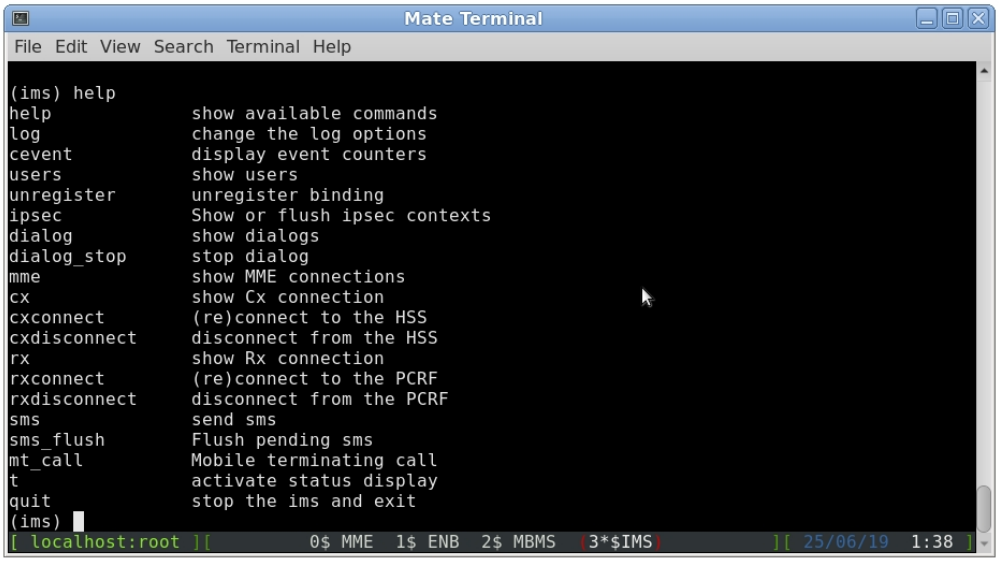

8.1.2 Exit screen

```
ctrl+a d
```

8.2 Command line monitor

In eNB component, `t` command provides key logging information (See the list of parameter using `t help` command.

8.2.1 t command

`t` command (without argument) provides key information about the Uplink and downlink transfer

```
(enb) t
Press [return] to stop the trace
              ----DL---------------------- --UL-----------------------------------------------
UE_ID  CL RNTI C cqi ri  mcs retx txok brate  snr puc1  mcs rxko rxok brate    turbo phr  pl   ta
    3 001 003f 1  15  2 28.0    0  202  151M 15.6 11.9 20.0    0    1 8.40k  1/1.0/1  40  59  0.0
    3 001 003f 1  15  2 28.0    0 4000  149M 15.7 12.8 20.0    0   25 10.5k  1/1.0/1  40  59  0.0
    3 001 003f 1  15  2 28.0    0 4000  150M 14.7 13.0 20.0    0   25 10.5k  1/1.0/1  40  59  0.0
    3 001 003f 1  15  2 28.0    0 4000  149M 16.1 11.2 20.0    0   25 10.5k  1/1.0/1  40  59  0.0
    3 001 003f 1  15  2 28.0    0 4000  150M 15.5 11.0 20.0    0   25 10.5k  1/1.0/1  40  59  0.0
```

Where for downlink:

- `UE ID` is the identifier allocated by the eNodeb to each UE. Note: This value changes each time RRC connection is released.
- `CL` is the number of aggregated DL cells
- `RNTI` is the (c) RNTI of each UE
- `C` is the number of carrier used by the UE

- `cqi` is the Channel Quality Indicator reported by the UE, between 0 (bad) and 15 (very good). If there are several aggregated DL cells, the minimum cqi is displayed.
- `ri` is the Rank Indicator (number of layers for MIMO). If there are several aggregated DL cells, the minimum rank indicator is displayed.
- `mcs` (Modulation Coding Scheme) is the average MCS value used in downlink during the measurement interval period. More details about MCS range are available in 3GPP TS 36.213
- `retx` (retransmission) is the number of retransmission sent by UE in Uplink or received by eNodeB in downlink. This parameter gives indications about the channel quality.
- `txok` is the number of successfully transmitted transport blocks.
- `brate` is the average bitrate (at the MAC layer), in bits per second.

Where for uplink:

- `snr` is the measured Signal to Noise Ratio for the uplink from the PUSCH reference signals and the SRS.
- `puc1` is the measured Signal to Noise Ratio for the last PUCCH1.
- `rxko` is the number of received uplink transport blocks with CRC errors.
- `rxok` is the number of received uplink transport blocks without CRC error.
- `turbo` gives the minimum, average and maximum number of iterations of the turbo decoder.
- `phr` is the content of the last Power Headroom MAC control element sent by the UE. It is expressed in dB. Negative values indicate that the UE could not transmit with the required power.
- `pl` is the Uplink Path Loss in dB. It is measured from the reported PHR and the measured uplink power level. It is meaningful only if the RF interface correctly reports the absolute received power level.
- `ta` is the Average of the uplink timing advance measured for the UE in TA units.

8.2.2 t spl command

Once UE got attached to the cell, Uplink and Downlink signal levels have a direct impact on decoding performances. In order to reach full throughput in both ways, TX and RX antenna gain values must be set correctly (as described in section "TX/RX gain setting") in order to avoid saturation when set too high or Bler when set too low. The command t spl under eNB terminal helps to monitor the RX and TX signal power:

```
(enb) t spl
Press [return] to stop the trace
--TX 1----------- --TX 2----------- dBFS --RX 1----- --RX 2-----
  RMS  PAPR   MAX   RMS  PAPR   MAX  SAT   RMS   MAX   RMS   MAX
-24.6  17.0  -7.7 -24.6  17.5  -8.3    0 -42.7 -30.4 -42.7 -30.4
-24.6  17.0  -7.7 -24.6  17.5  -8.4    0 -42.7 -30.5 -42.7 -29.7
-24.6  17.0  -7.7 -24.6  17.5  -7.9    0 -42.7 -30.2 -42.7 -29.8
-24.6  17.0  -7.7 -24.6  17.5  -8.4    0 -42.7 -30.4 -42.6 -29.7
-24.6  17.0  -7.7 -24.6  17.5  -8.4    0 -42.7 -30.8 -42.7 -30.2
-24.6  17.0  -7.7 -24.6  17.5  -8.4    0 -42.7 -30.4 -42.7 -30.5
-24.6  17.4  -7.2 -24.6  17.5  -8.3    0 -42.7 -30.7 -42.7 -30.5
```

TX columns provides information about transmitted signal power.

- `TX RMS`: stands for transmitted Root-Mean-Square. This is the mean value in dB FS (full Scale)

- `TX PAPR`: stands for Peak-to-Average Power Ratio. PAPR is the ratio of peak power to the average power of a signal. It is expressed in the units of dB. In LTE system, OFDM signal PAPR is approx. 12dB . If RMS + PAPR exceed the max power of the power amplifier, saturation will happen
- `TX MAX`: stands for Maximum. Displays the maximum sample value during the measurement interval period.
- `TX SAT`: stands for Saturation. Displays the number of saturation events during the measurement interval. If SAT value is different of 0, it means that the transmitted signal in Downlink is saturated. In this case, tx_gain should be decreased until SAT is equal to 0.

RX columns provides information about received signal power.

- `RX RMS`: stands for Received Root-Mean-Square. This is the mean value in dB FS (full Scale)
- `RX MAX`: stands for Maximum. Displays the maximum sample value during the measurement interval period. If RX MAX value equals to 0, it means that the received signal in UL is saturated. In this case, rx_gain should be decreased until RX MAX is below 0.

In Wireless test conditions, the recommended values for PCIe SDR cards are :

```
tx_gain: 90.0, /* TX gain (in dB) */
rx_gain: 60.0, /* RX gain (in dB) */
```

In RF cables test conditions, the recommended values for PCIe SDR cards are :

```
tx_gain: 60.0, /* TX gain (in dB) */
rx_gain: 00.0, /* RX gain (in dB) */
```

Note : tx_gain and rx_gain commands can be used in eNB screen to decrease or increase the TX gain and RX gain respectively

8.2.3 t cpu command

t cpu command provides key information about the CPU load .This is useful for verifying that PC is not running out of CPU when expected KPI are not reached.

```
-Proc-  ---RX--------   ---TX--------   ---- TX/RX diff (ms)
   CPU    MS/s    CPU     MS/s    CPU    min/avg/max sigma
51.8%   23.040   6.6%   23.040   1.6%   2.23/2.8/3.3 0.2
52.9%   23.040   6.6%   23.039   1.6%   1.97/2.8/3.3 0.2
52.3%   23.040   6.6%   23.041   1.5%   2.20/2.8/3.3 0.2
51.4%   23.040   6.6%   23.040   1.6%   2.20/2.8/3.3 0.2
50.8%   23.040   6.6%   23.039   1.6%   2.19/2.8/3.3 0.2
```

`t cpu` shows CPU consumption for the main LTE task (Proc), the reception chain (RX) or transmission chain (TX). Units are MS/s (Million of sample per second)

On top of that, `t cpu` command provides information on TX-RX delay: The min, average and max values are given in milliseconds.
In other words, in LTE FDD mode as instance, eNodeB receives data in Uplink and must acknowledge (or nack) them 4ms later to the UE. eNodeB has by consequence 4ms to decode the uplink samples and send the ack/nack answer in downlink. The RX/TX delay is the remaining time before data are processed and time they must be sent in downlink.
If this value decreases to zero, this means that PC is too slow and physical layer is running out of CPU to process the data within this period. The higher is the TX/RX value is , the better it is.

8.3 logging

eNodeB and MME generate log files under /tmp/ directory (enb0.log, ims.log and mme.log) that could be used for further analysis and debugging.
The verbosity if these logs can be customized by modifying the `log_options` field available in the enb.cfg and mme.cfg configuration files (See lteenb.pdf or ltemme.pdf for more details).

Note: We recommend to activate physical layer debug traces by adding phy.level=debug in your eNodeB config file.

8.4 Real time logging

The LTE web interface allows to analyze Amarisoft LTE software logs and get real time information from the system.
For more details about the Graphical user interface please refer to ltewww.pdf document available under Extranet.

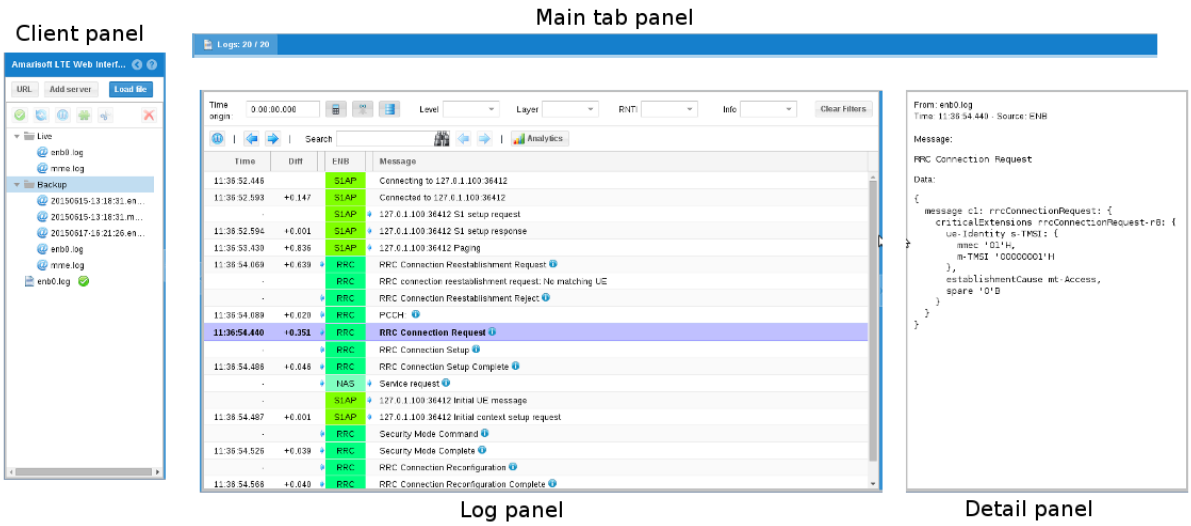

9 Throughput tests

For testing data throughput and reach the maximum uplink and downlink bitrate, please refer to the appnote_throughput.pdf document