Product Description

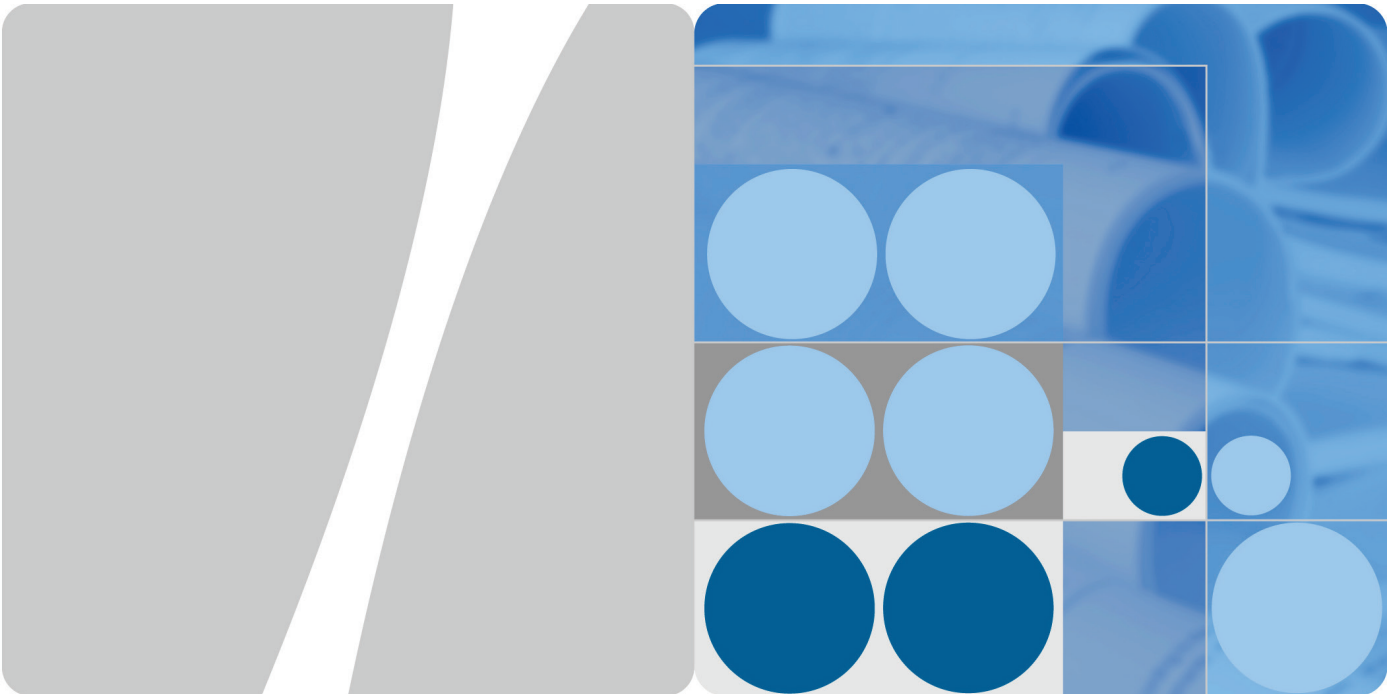

HUAWEI B890 LTE Wireless Gateway
V100R001

Issue 03

Date 2013-02-25

HUAWEI TECHNOLOGIES CO., LTD.

Huawei Technologies Co., Ltd. provides customers with comprehensive technical support and service. Please feel free to contact our local office or company headquarters.

Huawei Technologies Co., Ltd.

Address: Huawei Industrial Base
Bantian, Longgang
Shenzhen 518129
People's Republic of China

Website: http://www.huaweidevice.com

Email: mobile@huawei.com

Copyright © Huawei Technologies Co., Ltd. 2013. All rights reserved.

No part of this document may be reproduced or transmitted in any form or by any means without prior written consent of Huawei Technologies Co., Ltd.

Trademarks and Permissions

and other Huawei trademarks are trademarks of Huawei Technologies Co., Ltd.

LTE is a trade mark of ETSI.

All other trademarks and trade names mentioned in this document are the property of their respective holders.

Notice

The information in this document is subject to change without notice. Every effort has been made in the preparation of this document to ensure accuracy of the contents, but all statements, information, and recommendations in this document do not constitute the warranty of any kind, express or implied.

Some features of the product and its accessories described herein rely on the software installed, capacities and settings of local network, and may not be activated or may be limited by local network operators or network service providers, thus the descriptions herein may not exactly match the product or its accessories you purchase.

About This Document

Summary

This document provides information for product features, main functions and services, technical specifications and technical references.

This document includes:

Chapter	Details
1 Product Overview	Describes the appearance and main services of product
2 Features	Describes the product features
3 Technical Specifications	Describes the specifications of product hardware, software and user interface
4 Services and Applications	Describes the main functions and applications
5 System Structure	Describes the product system structure
6 Technical References	Describes Standards and Communication Protocols of the DATACOM Products
7 Packing List	Describes the devices and accessories of the product

NOTE

The document is an invitation to offer but not an offer. It is intended to describe the general features and functions of products. The features and functions of certain products vary with requirements of customers.

History

Issue	Details	Date
01	Initial official release.	2012-08-31
02	• Add B890-53. • Update parameters of RF and Antenna.	2013-02-20
03	Update the rate of LTE TDD.	2013-02-25

Contents

1 Product Overview 6

2 Features 8

3 Technical Specifications 9

3.1 Hardware Specifications 9

3.2 Antenna Specifications 11

3.3 Software Specifications 13

4 Services and Applications 16

4.1 Wireless Router 16

4.2 Voice Service 16

4.3 SMS 17

4.4 Security Service 17

4.5 USB Function 17

4.6 Local Management and Maintenance 17

5 System Structure 18

6 Technical References 19

6.1 Standards and Communication Protocols of the DATACOM Products 19

6.2 Standards and Communication Protocols of the Wireless Interface 19

7 Packing List 22

A Acronyms and Abbreviations 23

1 Product Overview

The B890 LTE wireless gateway (hereinafter refereed to as the B890) is a wireless LTE 4G gateway, which provides users with flexible and diversified 4G and 3G data access services and voice services.

NOTE

The frequency bands of the product are optional. The service provider can customize the bands according to user requirements.

- B890-53: LTE Band 7 FDD 2600MHz;
  WCDMA Band 1/2/5 2100/1900/850MHz
- B890-66: LTE Band 2/4/5/7/12/13/17 FDD 1900/AWS/850/2600/NA700MHz;
  WCDMA Band 2/4/5 1900/AWS/850MHz
- B890-73: LTE Band 1/3/8/40 FDD 2100/1800/900, TDD 2300MHz;
  WCDMA Band 1/8 2100/900MHz
- B890-75: LTE Band 1/3/7/8/20 FDD 2100/1800/2600/900/800MHz;
  WCDMA Band 1/8 2100/900MHz

B890 supports the following standards:

- LTE(Long Term Evolution)
- HSPA+ (High Speed Packet Access Plus)
- HSUPA (High Speed Uplink Packet Access)
- HSDPA (High Speed Downlink Packet Access)
- WCDMA (Wideband Code Division Multiple Access)

B890 supports wired and wireless network access, and provides data routing service.

B890 provides the following services:

- Data service
- Voice service
- SMS
- Security Service
- Local maintenance management function

B890 appearance

2 Features

The B890 mainly supports the following features:

- Multiple network environments, Supports LTE/HSPA+/HSUPA/HSDPA/WCDMA(UMTS) and Ethernet.
- High speed experience. Supports data services of maximum rate of LTE(FDD:DL 100Mbps,UL 50Mbps;TDD:DL 68Mbps,UL 17Mbps), HSPA+ (DL 42.2Mbit/s; UL5.76Mbit/s), HSPA (DL 7.2Mbit/s; UL5.76Mbit/s), 384kbit/s WCDMA PS, 64kbit/s WCDMA CS
- Supports maximum rate of 300Mbps 802.11b/g/n
- WPS 2.0
- AP function
- Built-in DHCP Server, DNS RELAY and NAT
- Security services. Provides instant protection to block potential security risks and intrusion attempts.
- Intuitionistic and convenient Web-based management.
- IPv6
- DLNA
- FOTA
- Windows 8/ Windows 7/ Windows Vista/ Windows XP/ Windows 2000/ Mac OS
- User-friendly design of LED indicator. Easy to observe the status of equipment
- Receiving diversity and load equalizer
- Built-in WCDMA/LTE and WLAN high gain antenna
- External main/sub diversity window antenna interface
- USB 2.0 host interface

3 Technical Specifications

3.1 Hardware Specifications

Table 3-1 Technical specifications of the B890

Item	Description
Technical standard	• WAN: LTE/HSPA+/HSUPA/HSDPA/WCDMA • LAN: IEEE 802.3/802.3u • WLAN: IEEE 802.11b/g/n
Working frequency band	LTE: • B890-53: Band 7 FDD 2600MHz • B890-66: Band 2/4/5/7/12/13/17 FDD 1900/AWS/850/2600/NA700MHz • B890-73: Band 1/3/8/40 FDD 2100/1800/900, TDD 2300MHz • B890-75: Band 1/3/7/8/20 FDD 2100/1800/2600/900/800MHz
	WCDMA: • B890-53: Band 1/2/5 2100/1900/850MHz • B890-66: Band 2/4/5 1900/AWS/850MHz • B890-73: Band 1/8 2100/900MHz • B890-75: Band 1/8 2100/900MHz
	WLAN: 2.401 GHz - 2. 4835 GHz
External interface/ Indicators	• One Power indicator • One Network indicator • One Wi-Fi/WPS indicator • One SMS indicator • One call status indicator • One WWAN dial up indicator (indicates whether you are using

Item	Description	
	the Wireless WAN) • One WAN dial up indicator (indicates whether you are using the Ethernet WAN) • Three LAN indicator • One USB indicator • One Functions ON or OFF switch • One DECT/Security Register Key(not supported at this time) • One Wi-Fi/WPS button • One dialing button • One Reset button	
Maximum transmit power	LTE	23dBm (+2dB/-2dB)
	WCDMA	24dBm (+1dB/-3dB)
	WLAN	• 802.11b: 17dbm (+2dB /-2dB) • 802.11g: 15dbm (+2dB /-2dB) • 802.11n: 15dbm (+2dB /-2dB)
Receiving sensitivity	LTE	-96dBm@10MHz
	WCDMA	-109dBm@3.84MHz
	WLAN	• 802.11b: ≤-83dBm@11Mbps / -92dBm@1Mbps • 802.11g: ≤-70 dBm@54Mbps • 802.11n: ≤-68dBm@MCS7 (BW=20MHz) ≤-65dBm@MCS7 (BW=40MHz)
Power consumption	<15W	
AC/DC power supply	• AC: 100V - 240V • DC: 12V/2A	
Dimensions (Maximum)	222mm (Width) x 48mm (Deep) x 161mm (High)	
Weight	about 510g (excluding the power adapter)	
Temperature	• Working temperature: 0℃- +45℃ • Storage temperature: -30℃ - +60℃	
Humidity	5% - 95%	

3.2 Antenna Specifications

Table 3-2 LTE/WCDMA main antenna specifications

Item	Description
Frequency	• B890-53: LTE Band 7 FDD 2600MHz; WCDMA Band 1/2/5 2100/1900/850MHz • B890-66: LTE Band 2/4/5/7/12/13/17 FDD 1900/AWS/850/2600/NA700MHz; WCDMA Band 2/4/5 1900/AWS/850MHz • B890-73: LTE Band 1/3/8/40 FDD 2100/1800/900, TDD 2300MHz; WCDMA Band 1/8 2100/900MHz • B890-75: LTE Band 1/3/7/8/20 FDD 2100/1800/2600/900/800MHz; WCDMA Band 1/8 2100/900MHz
Input impedance	50Ω
Standing wave ratio	• LTE Band 1/2/3/4/7/38/40, UMTS Band 1/2/3/4 <2 • LTE Band 5/8/12/13/17/20, UMTS Band 5/8 <3
H side gain	≥1dBi (horizontal level peak value)
Polarization	Linear polarization

Table 3-3 LTE/WCDMA sub diversity antenna specifications

Item	Description
Frequency	• B890-53: LTE Band 7 FDD 2600MHz; WCDMA Band 1/2/5 2100/1900/850MHz • B890-66: LTE Band 2/4/5/7/12/13/17 FDD 1900/AWS/850/2600/NA700MHz; WCDMA Band 2/4/5 1900/AWS/850MHz • B890-73: LTE Band 1/3/8/40 FDD 2100/1800/900, TDD 2300MHz; WCDMA Band 1/8 2100/900MHz • B890-75: LTE Band 1/3/7/8/20 FDD 2100/1800/2600/900/800MHz; WCDMA Band 1/8 2100/900MHz
Input impedance	50Ω
Standing wave ratio	• LTE Band 1/2/3/4/7/38/40, UMTS Band 1/2/3/4 <2 • LTE Band 5/8/12/13/17/20, UMTS Band 5/8 <3
Gain	≥ 0dBi (horizontal level peak value)

Item	Description
Polarization	Linear polarization

Table 3-4 WLAN main diversity antenna specifications

Item	Description
Frequency	2.401 GHz - 2.4835 GHz
Input impedance	50Ω
Standing wave ratio	< 2
H side gain	Horizontal level minimum value: >-2dBi Horizontal level average value: >-1dBi
Polarization	Linear polarization
Double antenna isolation	>15dB
Envelope correlation coefficient	<0.4

Table 3-5 External LTE/WCDMA main/sub diversity window antenna specifications(Optional)

NOTE

- Signals may be weak in some areas; thus, you can choose whether to use the external window antenna.
- The external window antenna is an optional accessory.
- The external window antenna can be used indoor only. Please put it near window and avoid thunderstorms when using.
- Before using an external window antenna, please log in to the web management page (http://192.168.1.1) first and set antenna mode to outer.

Item	Description
Frequency	• B890-53: LTE Band 7 FDD 2600MHz; WCDMA Band 1/2/5 2100/1900/850MHz • B890-66: LTE Band 2/4/5/7/12/13/17 FDD 1900/AWS/850/2600/NA700MHz; WCDMA Band 2/4/5 1900/AWS/850MHz • B890-73: LTE Band 1/3/8/40 FDD 2100/1800/900, TDD 2300MHz; WCDMA Band 1/8 2100/900MHz • B890-75: LTE Band 1/3/7/8/20 FDD 2100/1800/2600/900/800MHz; WCDMA Band 1/8 2100/900MHz
Input impedance	50Ω

Item	Description
Standing wave ratio	• LTE Band 1/2/3/4/7/38/40, UMTS Band 1/2/3/4 <2 • LTE Band 5/8/12/13/17/20, UMTS Band 5/8 <3
H side gain	≥ -2dBi (horizontal level peak value)
Polarization	Linear polarization (vertical)
Length of the connection cable	<3m
Interface standard	SMA-C-J1.5

3.3 Software Specifications

Table 3-6 Software specifications

Item	Description
Gateway	**Router**: • Supports static routing • Supports the default routing (the routing address is 0.0.0.0). You can set the WAN connection to the default routing to generate default routing table items
	Supports ARP
	Supports ICMP
	Supports DNS Relay
	NAT: • Supports NAT, NAPT (compliant with RFC2663, RFC3022 and RFC3027) • Supports fragment message identification for normal NAT • Supports ALG
	DHCP Server: • The default IP addresses of the DHCP server is from 192.168.1.100 to 192.168.1.200. The default gateway address is 192.168.1.1 • The default DHCP lease is 24 hours • The DHCP Server can be enabled or disabled • The address pool of the DHCP server can be configured. • The lease can be configured • The IP address status can be displayed, such as the host name, MAC address, IP address, and remaining lease

Item	Description
Data service	• **LTE**: FDD：DL 100Mbit/s UL 50Mbit/s; TDD：DL 68Mbit/s UL 17Mbit/s • **HSPA+**: DL 42.2Mbit/s UL 5.76Mbit/s • **HSPA**: DL 7.2Mbit/s UL 5.76Mbit/s • **WCDMA PS**: DL 384kbit/s UL 384kbit/s • **WCDMA CS**: DL 64kbit/s UL 64kbit/s
	WLAN: • 802.11b: 11Mbit/s, 5.5Mbit/s, 2Mbit/s, 1Mbit/s • 802.11g: 54Mbit/s, 48Mbit/s, 36Mbit/s, 24Mbit/s, 18Mbit/s, 12Mbit/s, 9Mbit/s, 6Mbit/s • 802.11n: HT40 MCS15(300Mbit/s), HT20 MCS15(144.4Mbit/s)
SMS	• Writing/Sending/Receiving • Group sending (up to 10 contacts at a time) • Storage: Messages can be saved in USIM card of the B890-53 (storage capacity depends on the USIM card type) • Messages prompt • SMS center number settings
Firewall setup	• Firewall Switch • LAN MAC Filter • URL Filter • LAN IP Filter • Virtual Server • Port Forwarding • Port triggering • DMZ Service • UPnP Service • ACL settings • ALG settings
LAN	• 10Mbit/s and 100Mbit/s auto-negotiation • MDI/MDIX auto-sensing • IEEE802.3/802.3u is compatible
WLAN	4 SSID broadcast and hiding are supported in maximum.
	Supports Wi-Fi 802.11b/g/n
	Supports WPS 2.0

Item	Description
	Authentication: • Open System authentication • Shared Key authentication • ASCII • 64/128-digit WEP encryption • WPA-PSK/ WPA2-PSK encryption • TKIP ciphering algorithm • AES ciphering algorithm • TKIP and AES ciphering algorithm synchronously
	MAC address authentication: • White list • Black list • The preceding two lists cannot coexist. • Up to 16 MAC address items.
	Ratio adjustment: • Automatically • Manually
	STA management: • Supports inquiry of STA status • Supports limit of access users (up to 32 users)
WAN	• Support APN Management • Support PPP username and password • Support PPP dial up
Wireless WAN	• Support APN management • Support QMI username and password • Support QMI dial up
Wired WAN	• Support PPPoE/IPoE static IP, dynamic IP dial up • Support PPPoE username and password
System requirement	• Windows 8, Windows 7, Windows Vista, Windows XP, Windows 2000, Mac OS • Display resolution: 1024*768 or above • Windows XP, IE 6.0, 7.0, 8.0;Windows 7 IE 8.0; Firefox 10.0; Safari 5.0, 5.1.2(MAC); Opera 11.1, 12.0; Chrome 17.0 • Your computer's hardware system should meet or exceed the recommended system requirements for the installed version of OS

4 Services and Applications

4.1 Wireless Router

The B890 can be used as a wireless router when the Wi-Fi is enabled. You can access the Internet service through setting up the wireless network connection with the B890.

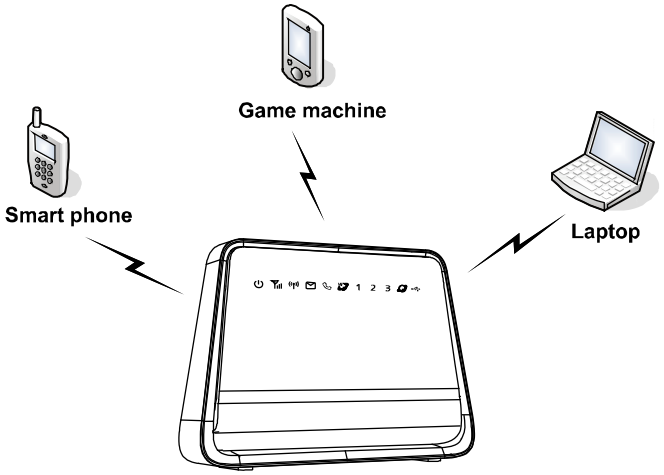

Figure 4-1 Connect wireless device to the B890

4.2 Voice Service

The B890 provides a telephone interface, which can be used for connecting a telephone for the voice service. At most three extensions can be connected. When there is a new incoming call, all extensions play the ringtone. Only one extension can receive or make a call simultaneously.

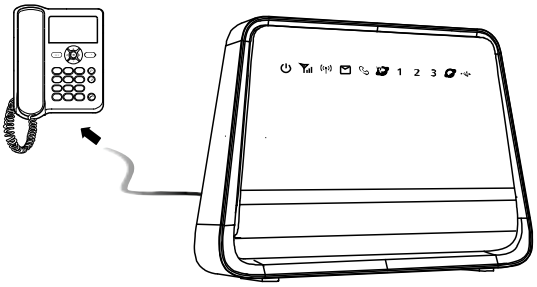

Figure 4-2 Connect telephone to the B890

4.3 SMS

The B890 supports message writing/sending/receiving and group sending (up to 10 contacts at a time). You can manage messages through the Web page, such as inbox, outbox, draft.

4.4 Security Service

Its various security features, such as the firewall, user authentication, and PIN protection, protect users against security threats from the Internet when users are using network services.

4.5 USB Function

The B890 provides one USB port, which support the B890 used as a File Sharing Center. Connect USB devices to the B890, such as Portable Hard Drive or Printer. The users connect to the B890 can save or sharing the file on the Portable Hard Drive, or using the same printer.

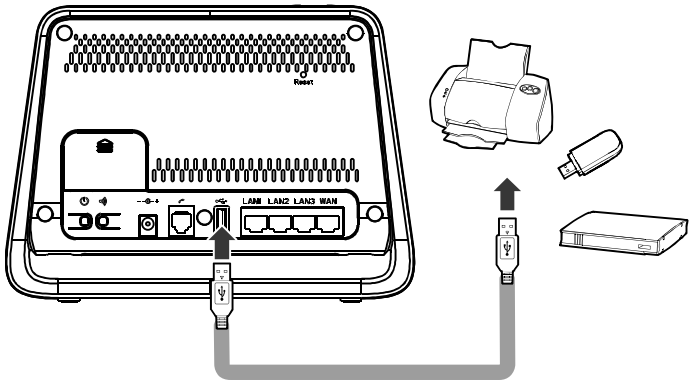

Figure 4-3 Connect USB devices to the B890

4.6 Local Management and Maintenance

The B890 supports local configuration through the Web page. You can accomplish device management, network configuration and ensure normal and stable performance.

5 System Structure

Figure 5-1shows the system architecture.

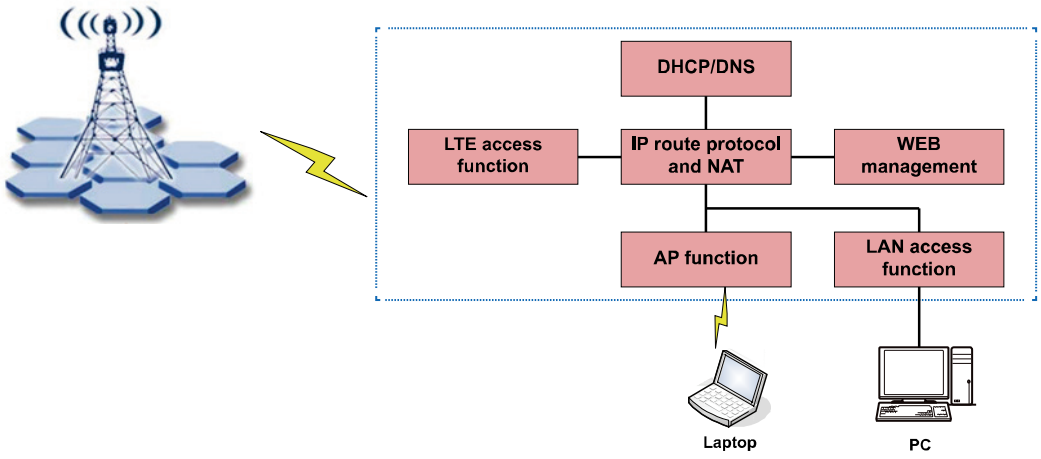

Figure 5-1 System architecture

The following describes modules shown in Figure 5-1.

- LTE access: The B890 adopts the LTE access technology at the WAN side. The B890 can access the 4G/3G broadband packet-based network through the point-to-point protocol (PPP) dial-up.
- WLAN AP function: An 802.11 b/g/n-compliant WLAN AP interface is provided, used for wireless networking at home. The interface is compliant with the IEEE802.11 b/g/n standard and the WPA-PSK /WPA2-PSK/WEP security authentication.
- DHCP/DNS: The DHCP server dynamically allocates IP addresses to PCs. The DNS parses domain names.
- Web management: You can configure, modify and query the configuration information of the B890.
- Routing and NAT: High-speed routing capability. With the built-in NAT, the B890, together with 4G/3G terminals, can provide flexible broadband access solutions and networking schemes.

6 Technical References

6.1 Standards and Communication Protocols of the DATACOM Products

Table 6-1 Standards and communication protocols of the DATACOM products

Item	Description
Physical layer	RFC894
PPP	RFC1915, RFC1962, RFC1994, RFC2433, RFC2759, RFC1332, RFC1877, RFC1471, RFC1570, RFC2484, RFC1717, RFC1934, RFC1990, RFC1334, RFC1974, RFC1661
ARP	RFC826
IP	RFC791, RFC1122, RFC1071, RFC1141, RFC1624, RFC792, RFC950, RFC1256
ICMP	RFC792, RFC950, RFC1256
TCP	RFC793
UDP	RFC768
DHCP	RFC1531, RFC1533
NAT	RFC1631
WLAN	IEEE 802.11b/g 802.11b/g/n

6.2 Standards and Communication Protocols of the Wireless Interface

The wireless interface conforms to the WCDMA R99, R4, R5, R6, R7, R8 standards.

Table 6-2 Standards and communication protocols of the wireless interface

Item	Description
Layer1 Specifications (Physical)	Examples of Channel Coding and Multiplexing TR 25.944 (V3.3.0) Physical Layer – General Description TS 25.201 (V3.1.0) Physical Channels and Mapping of Transport Channels onto Physical Channels (FDD) TS 25.211 (V3.5.0) Multiplexing and Channel Coding (FDD) TS 25.212 (V3.5.0) Spreading and Modulation (FDD) TS 25.213 (V3.4.0) Physical Layer – Procedures (FDD) TS 25.214 (V3.5.0) Physical Layer – Measurements (FDD) TS 25.215 (V3.5.0)
Layer 2 Specifications (MAC/RLC)	MAC Protocol Specification TS 25.321 (V3.6.0) RLC Protocol Specification TS 25.322 (V3.5.0)
Layer 3 Specifications (RRC)	UE Interlayer Procedures in Connected Mode TS 25.303 (V3.6.0) UE Procedures in Idle Mode TS 25.304 (V3.5.0) RRC Protocol Specification TS 25.331 (V3.5.0)
Layer 3 NAS/Core Network (MCM)	Architectural Requirements for Release 1999 TS 23.121 (V3.5.1) NAS Functions Related to Mobile Station (MS) in Idle Mode TS 23.122 (V3.5.0) Mobile Radio Interface Signaling Layer 3 – General Aspects TS 24.007 (V3.6.0) Mobile Radio Interface Layer 3 Specification – Core Network TS 24.008 (V3.6.0) PP SMS Support on Mobile Radio Interface TS24.011 (V3.5.0)
General Specifications	UE Capability Requirements TR 21.904 (V3.3.0) UE Radio Access Capabilities TR 25.926 (V3.2.0) Vocabulary TR 25.990 (V3.0.0) Radio Interface Protocol Architecture TS 25.301 (V3.6.0) Services Provided by the Physical Layer TS 25.302 (V3.7.0) Synchronization in UTRAN Stage 2 TS 25.402 (V3.4.0)
Performance/Test Specifications	UE Radio Transmission and Reception (FDD) TS 25.101 (V3.5.0) Common Test Environments for User Equipment (UE) TS 34.108 (V3.2.0) Special Conformance Testing Functions TS 34.109 (V3.2.0) Terminal Conformance Specification TS 34.121 (V3.3.0) User Equipment (UE) Conformance Specification; Part 1: Protocol Conformance TS 34.123-1 (V3.2.0) User Equipment (UE) Conformance Specification; Part 2: Protocol Conformance TS 34.123-2 (V3.2.0)

Item	Description
Performance/Test Specifications	Terminal Conformance Specification, Radio Transmission and Reception (FDD) TS 34.121 (V3.3.0) User Equipment (UE) Conformance Specification; Part 1: Protocol Conformance TS 34.123-1 (V3.2.0) S48 User Equipment (UE) Conformance Specification; Part 2: Implementation Conformance Statement (ICS) Specification TS 34.123-2 (V3.2.0)
USIM Specifications	SIM and IC Card Requirements TS 21.111 (V3.3.0) 3rd Gen. Partnership Proj Tech. Spec. Group Terminals; SIM App. Toolkit (USAT) TS 31.111 (V3.3.0)

7 Packing List

Table 7-1 shows the devices and accessories of the B890.

Table 7-1 Packing list

Description	Quantity	Remarks
Wireless Gateway	1	Standard
Quick Start	1	Standard
Power supply adapter	1	Standard
Warranty card	1	Optional
Ethernet cable	1	Optional
Phone cable	1	Optional

B890 also provide external antenna as optional accessory for you to choose.

A Acronyms and Abbreviations

3G	The Third Generation
4G	The Fourth Generation
A	
AC	Alternating Current
ARP	Address Resolution Protocol
AP	Access Point
APN	Access Point Name
D	
DHCP	Dynamic Host Configuration Protocol
DNS	Domain Name Server
DL	Down Link
H	
HSPA	High Speed Packet Access
HSPA+	High Speed Packet Access Plus
HSDPA	High Speed Downlink Packet Access
HSUPA	High Speed Uplink Packet Access
HLR	Home Location Register
I	
IP	Internet Protocol
ICMP	Internet Control Message Protocol
L	
LAN	Local Area Network
LED	Light Emitting Diode

LTE	Long Term Evolution
L2TP	Layer 2 Tunneling Protocol
M	
MSC	Mobile Switching Center
N	
NAT	Network Address Translation
P	
PSTN	Public Switched Telephone Network
POTS	Plain Old Telephone Service
PPTP	Point to Point Tunneling Protocol
R	
RTT	Radio Transmission Technology
S	
SOHO	Small Office Home Office
SCP	Service Control Point
SGSN	Serving GPRS Support Node
SDRAM	Synchronous Dynamic Random Access Memory
T	
TKIP	Temporal Key Integrity Protocol
U	
UMTS	Universal Mobile Telecommunications System
UL	Up Link
V	
VLR	Visitor Location Register
VPN	Virtual Private Network
W	
WWAN	Wireless Wide Area Network
WAN	Wide Area Network
WLAN	Wireless Local Area Network
WCDMA	Wideband CDMA
Wi-Fi	Wireless Fidelity